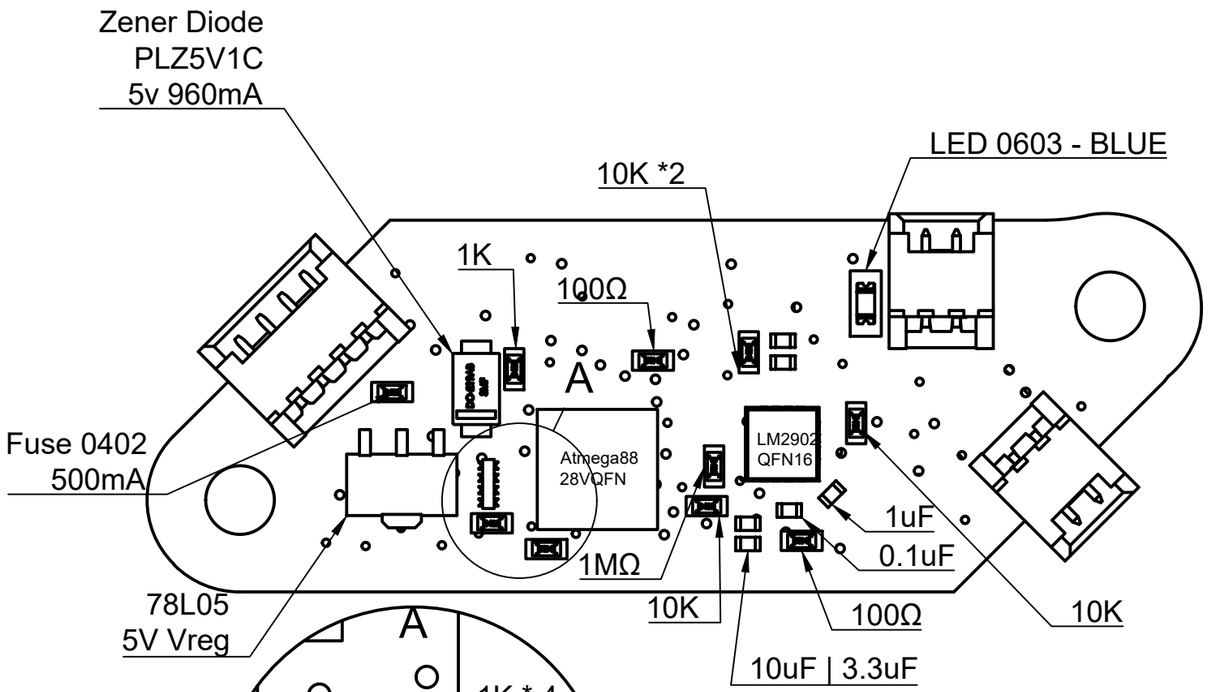

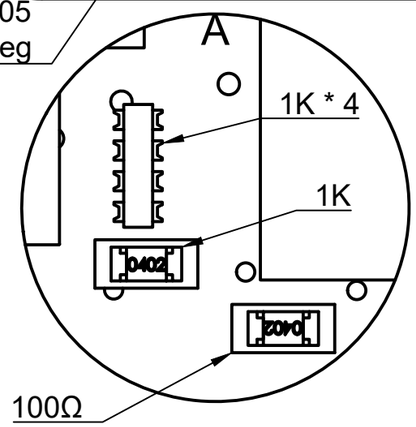

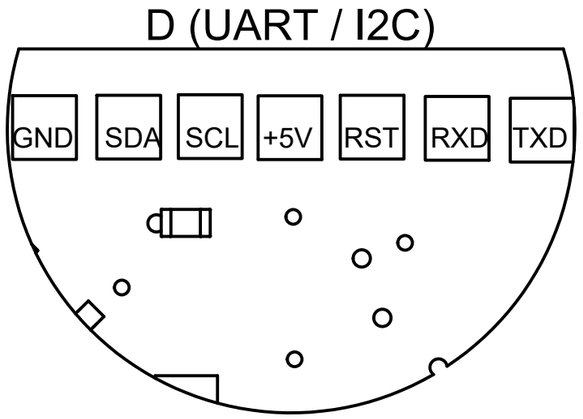

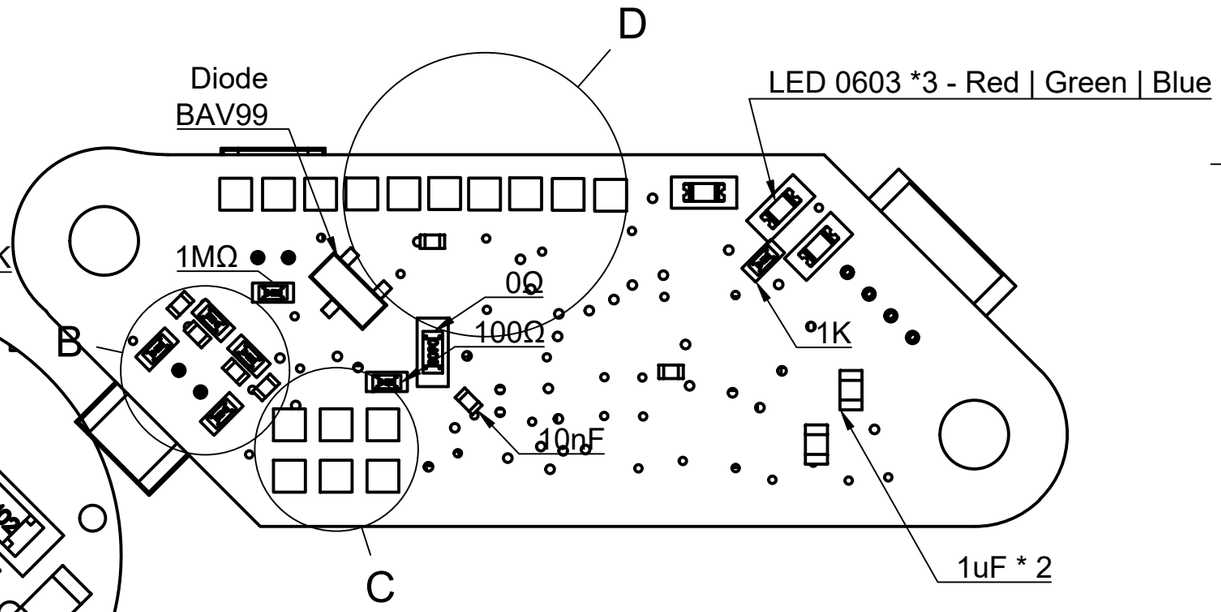

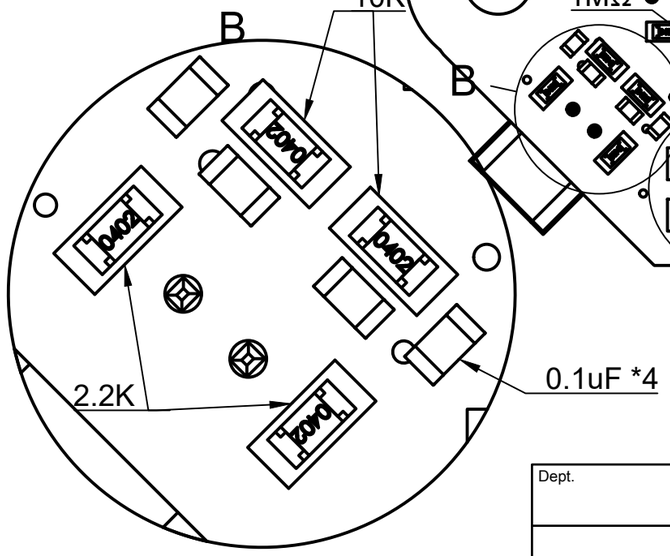

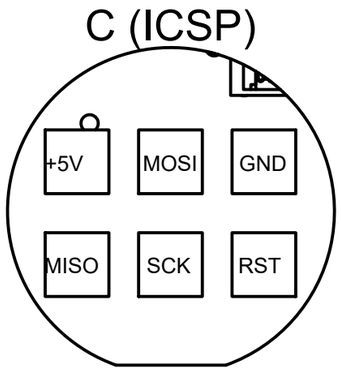

Dept.	Technical reference	Created by	Approved by
		Pyroballpcs Pyroballpcs 2/11/2019	
		Document type	Document status
		Title PiezoStandalone_PT100_1.1.1	DWG No.
			Rev. / Date of issue / Sheet 2/2